HYDRAULIC BIO SHREDDER

http://tiny.cc/bio-shredder

FEATURES & BENEFITS

- **Compact dimensions**
- **Excellent tool for chipping branches and small tree trunks**
- **Manual feeding and discharge chute rotation**
- **Equipped with safety stop system**
- **Foldable for easy transport**

The hydraulically powered chipper/shredder is a powerful tool for quickly reducing a pile of brushes, garden wastes, and tree limbs to reusable shredded mulch. Combined with the MultiOne, this chipper/shredder can work in areas not reachable with a traditional towed chipper.
The machines incorporates a feed roller that pulls the branches up to 90 mm (3.5 in) diameter into the chipper section in a controlled, safe speed. The chips are then processed by the shredder section, reducing the wood chips to mulch. The operator remains safely out of the way during the chipping/shredding process.

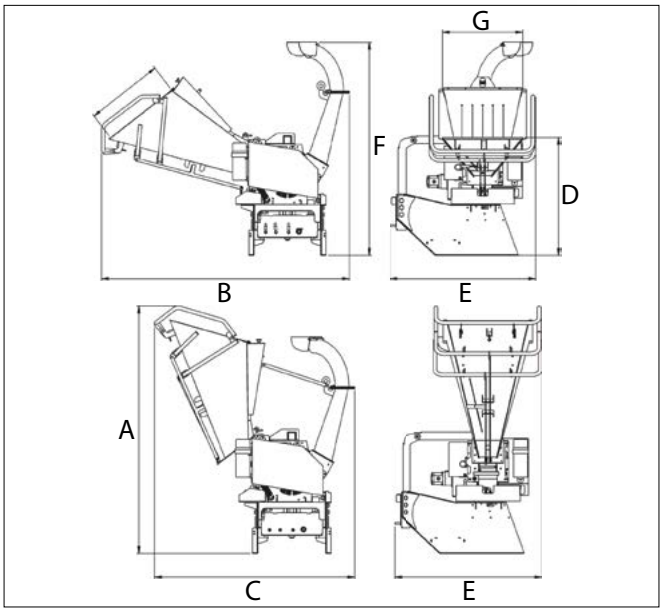

	Dimensions						
	A	B	C	D	E	F	G
cm	210	222	170	101	126	182	70
in	83	88	67	40	50	72	28

Model	Max timber diameter	Weight	Code
Hydraulic bio shredder	9 cm (3.5 in)	335 kg (740 lbs)	**C890731**

Compatibility	1.1	2.3	4.2	5.2	5.3	6.3	7.2	8.4	8.5	11.6	11.9	EZ5	EZ7 EZ8

Very compatible | Compatible | Not compatible