GRADER

http://tiny.cc/grader

FEATURES & BENEFITS

- **Optional laser control package for precise grade control**

The grader attachment converts the MultiOne machine into a high performance grading system, well suited for confined areas not accessible to larger machines. It is possible to level roads, squares, playgrounds and carefully lay gravel and sand.
The hydraulically controlled moldboard is controlled using the cab mounted auxiliary controls. To increase the grader efficiency and precision, the MultiOne's grader can be equipped with an optional laser control system. The grader is equipped with two front wheels mounted on a floating frame that assures the stability even on uneven ground.

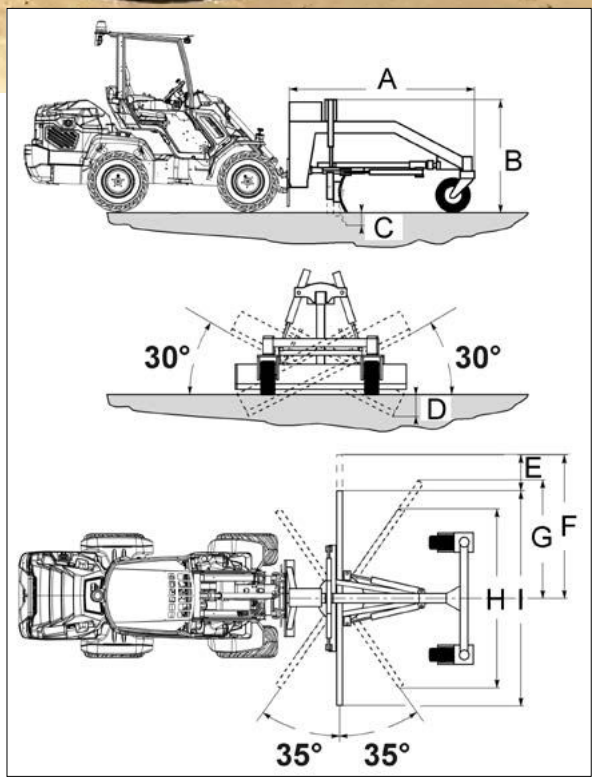

	A	B	C	D	E	F	G	H	I
cm	222	132	16,5	35,5	40	147	109	174	213
in	87.4	51.9	6.5	14	15.7	57.7	42.9	68.3	83.8

Model	Blade width	Weight	Code
Grader with hydraulic controls	210 cm (82.7 in)	550 kg (1212 lbs)	**C890105**
Laser (receiver only) twin angle	/	/	**C890107**

Compatibility	1.1	2.3	4.2	5.2	5.3	6.3	7.2	8.4	8.5	11.6	11.9	EZ5	EZ7 EZ8

Very compatible | Compatible | Not compatible