5 SERIES: 5.2 K iD

http://tiny.cc/5series-EN

MAX LIFTING CAPACITY	ENGINE POWER	SPEED	FLOW RATE	LIFT HEIGHT
890 kg	25 hp 18,5 kW	14 km/h	42 l/min	2,75 m

COMPLIANT WITH STAGE V EMISSION STANDARDS

Model	5.2 K iD
Engine	Kubota D902 - 3 cyl. - 898 cc.
Emission Standard	Stage V
Power (Iso Gross) / Torque	18,5 kW - 25 HP / 55 Nm @ 2400 rpm
Fuel	Diesel
Transmission	Hydrostatic
Drive speed (max.) (1)	14 km/h (8.7 mph)
Aux. hydraulics oil flow	42 l/min (11 GPM)
Max. lifting height	2,75 m (108 in)
Tipping load, max. (2)	1110 kg (2447 lbs)
Lifting capacity straight, max. (3)	890 kg (1962 lbs)
Breakout force / 50 cm (19.7 in)	800 kg (1764 lbs)
Pushing force (c)	900 kgf (900 kp)
Average ground pressure (w/standard tires)	905 kg/m^2 (185 lbs/sqft)
Turning radius: inside/outside	890/1890 mm (35/74.4 in)
Standard tires (Tractor profile)	23x8.50-12
Weight	1020 kg (2250 lbs)
Product Code	**C977020**

(1) Maximum speed that can be achieved with the largest diameter tires available, on a flat surface and machine without attachments.
(2) Tipping limit, when the machine is straight, with rear weights and boom lifted just off the ground. Weight of attachment included.
(3) Maximum load that can be lifted just off the ground when the machine is straight and with rear weights. Weight of attachment is included.
Note: Refer to the Operator's manual for the comprehensive load diagram.

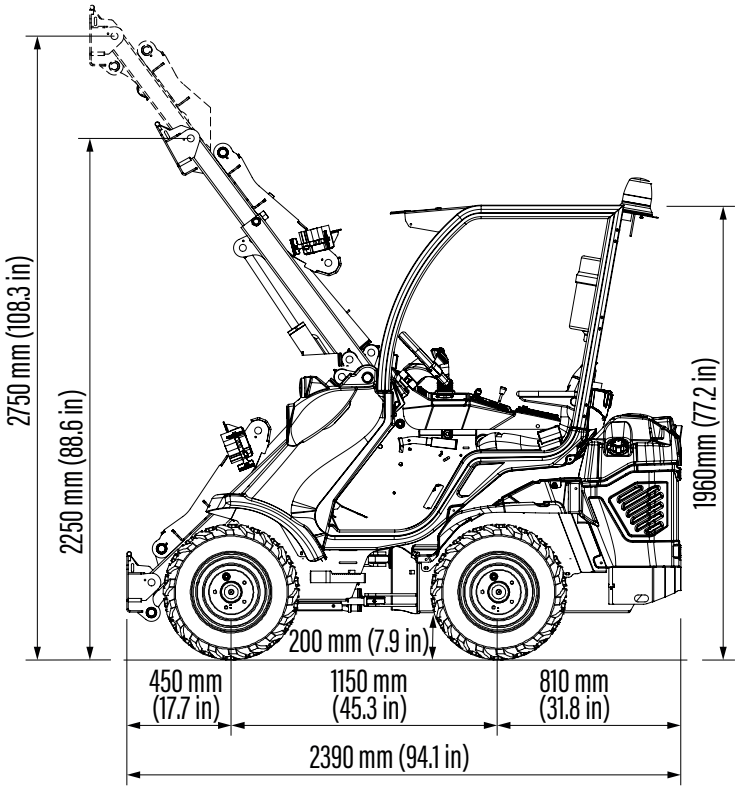

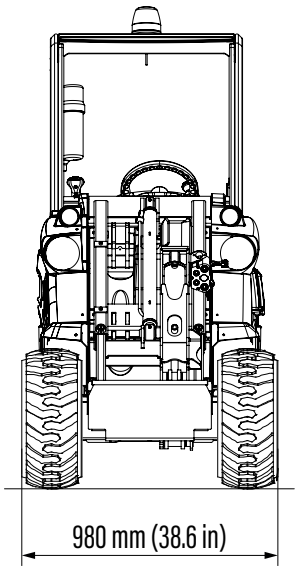

Tires size	Height	Width
23x8.50-12	1960 mm (77.2 in)	980 mm (38.6 in)
23x10.50-12 ET-25	1960 mm (77.2 in)	1090 mm (42.9 in)
27x8.50-15	2010 mm (79.1 in)	1000 mm (39.4 in)
26x12.00-12 ET-50	1998 mm (78.6 in)	1200 mm (47.2 in)

FEATURES

- Kubota D902, 3 cyl. - 898 cc diesel engine, water cooled, electric start, glow plug
- Stage V compliant engine
- Unbreakable Body Panels
- Hydraulic oil cooler
- Hydraulically pilot operated variable displacement drive pump
- Hydraulic multiconnector
- Double-H telescopic boom with self-levelling
- 4-functions joystick
- ROPS-FOPS Level I
- LCD graphic display with programmed service
- 4WD hydrostatic Direct Drive motors, proportional servo control
- 2 front working lights
- Ergonomic fully adjustable suspension heated seat with armrests and seat belt
- Mechanical parking brake
- High efficiency wheel motors
- Dynamic Block System (DBS)

5 SERIES - OPTIONS

Options	Code
110 V engine block heater	C885255
220 V engine block heater	C885250
2" Hitch receiver (not compatible with C883047)	C883062
3 additional working halogen lights	C883064
3 additional working LED lights	C883018
Additional front hydraulic outlets (5.3 K iD only)	C883503
Attachment coupling plate for rear mounting (not compatible with C883047)	C880031
Automatic locking plate	C880016
Backup warning beeper	C883021
Beacon light	C883039
Driver area cover	C880049
Flat face coupling kit	C880221
Floating boom valve	C885223
Fully enclosed cab with sound insulation linen	C883520
GPS tracker	C883075
Heating system	C883073
Left protection bar for operator	C885026
Mirrors	C880081
Multifunction joystick with ACI (5.2K iD only)	C883080
Polycarbonate back window (smart cabin)	C883523
Polycarbonate right side (smart cabin)	C883522
Polycarbonate windscreen (smart cabin)	C883506
Rear 12V electric socket	C883022
Rear bull bar (not compatible with C883062, C885014 and C880031)	C883047
Rear hydraulic outlets - double	C883502
Rear hydraulic outlets - single	C883501
Rear side weights 80 kg (40 kg + 40 kg) / 176 lbs (88 lbs + 88 lbs)	C883076
Rear weights 180 kg (90 kg + 90 kg) / 396 lbs (198lbs + 198 lbs)	C880054
Skid tires 27x8.50-15, set of 4	C884011

5 SERIES - OPTIONS

Options	Code
Snow chains for wheels 23x10.50-12, set of 2	C880046
Snow chains for wheels 23x8.50-12, set of 2	C880041
Snow chains for wheels 26x12.00-12, set of 2	C880042
Tie down bracket on wheel hub, set of 4	C883068
Torque divider	C883600
Tractor tires 23x10.50-12 ET-25, set of 4	C884007
Tractor tires 23x8.50-12, set of 4	C884005
Tractor tires 26x12.00-12 ET-50, set of 4	C884009
Trailer coupling (not compatible with C883047)	C885014
Turf tires 23x10.50-12 ET-25, set of 4	C884008
Turf tires 23x8.50-12, set of 4	C884006
Turf tires 26x12.00-12 ET-50, set of 4	C884010
Warning & Safety lights for road travel with mirrors	C883521
Wheel spacer 10 mm (0.4 in), set of 4 (max. 2 pcs for wheel)	C880090
Wheel spacer 55 mm (2.2 in), set of 4 (max. 1 pcs for wheel)	C885010
ACI Upgrade (5.2 K iD only)	C090027